Diritti riservati All rights reserved

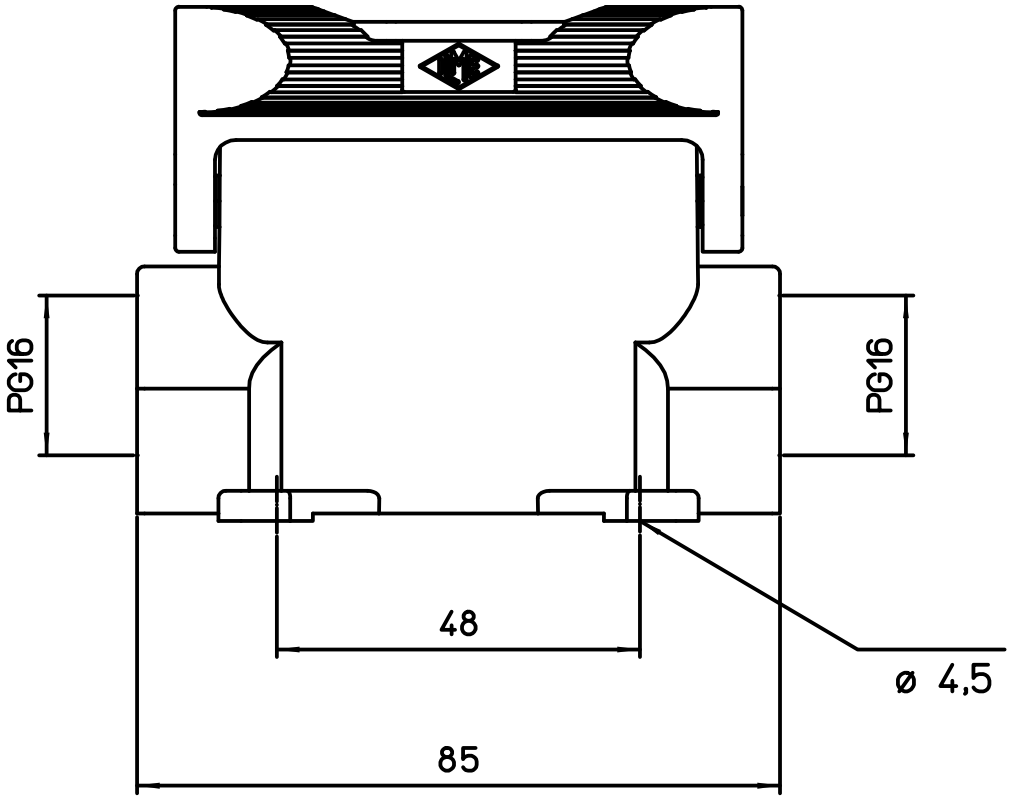

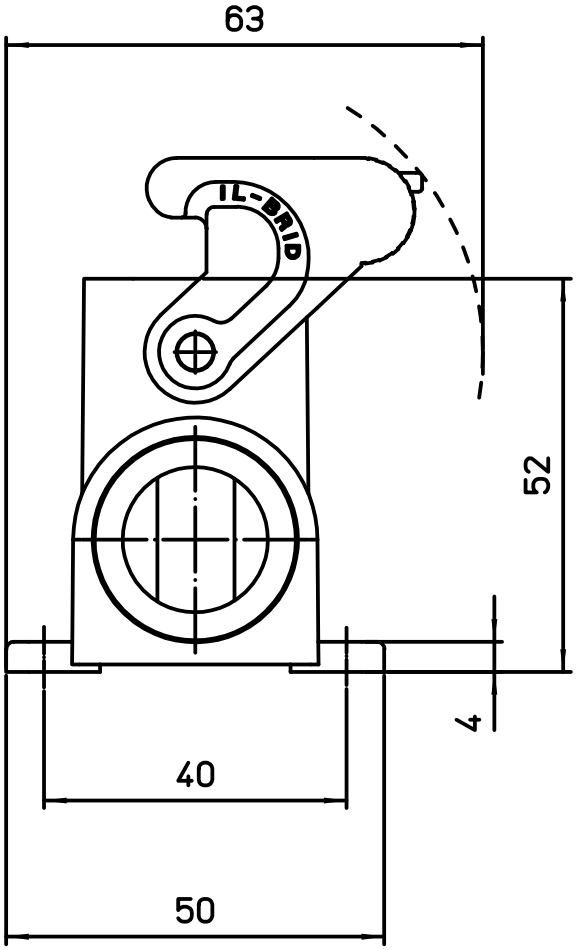

dimensions in mm	
Date	14/05/15
Sign.	M.Pezzimenti

CZP 15 L2

Surface mounting housing 1 lev. 2xPG16

Scale 1:1